Modeling and Stability Analysis Of SIQS Cholera Transmission Dynamics

Deepti Mokati[1], V.H. Badshah[1] and Nirmala Gupta[2]

[1] School of Studies in Mathematics,Vikram University, Ujjain (M.P.), India

[2]Govt. Girls P.G. College,Ujjain(M.P.),India

Abstract

The present paper deals with a Susceptible-Infected-Quarantined-Susceptible mathematical model for cholera transmission dynamics. Find out disease-free and endemic equilibria and basic reproduction number R_q . Routh–Hurwitz criteria ,Castillo-Chavez criteria and Dulac's criterion plus Poincare-Bendixson theorem have been applied for analyzing stability for the considered model . Numerical simulations are also conceded .

Keywords : Quarantine, Reproduction number, Routh–Hurwitz criteria ,Castillo-Chavez criteria.

MSC : 34D20,49J15,92D25,92D30,93D20.

1. Introduction

Adebimpe O. et.al. [1] studied an SIQS epidemic model with saturated incidence rate and discussed the stability of disease-free and endemic equilibrium using different criterias. Castillo-Chavez et. al. discussed reproductive number and stability for some epidemic models.Specially, they gave a theorem on globally analysis of equilibrium points known as Castillo-Chavez criterion[2] . An SIS cholera epidemic model with quarantine effect have been developed by Mokati D. et al.[3].Many researchers investigated the composite behavior of cholera disease. Nirwani N. et al. proposed a SIQR-B cholera epidemic model and gave the results about the effects of quarantine for the cholera model[4]. Pang Y. et al. discussed the dynamics of a stochastic SIQS outbreak model [5].

2. The Mathematical model

We have considered an SIQS cholera dynamical model in which human population is divided into susceptible (S) , infectious (I) , quarantine (Q) and recovered (R) individuals at time t and the pathogen population is assumed as $B(t)$ at time t.Now consider the total number of population at time t is $S+I+Q+R=1$.

The following figure 1 represents the flow of individuals for the considered model :

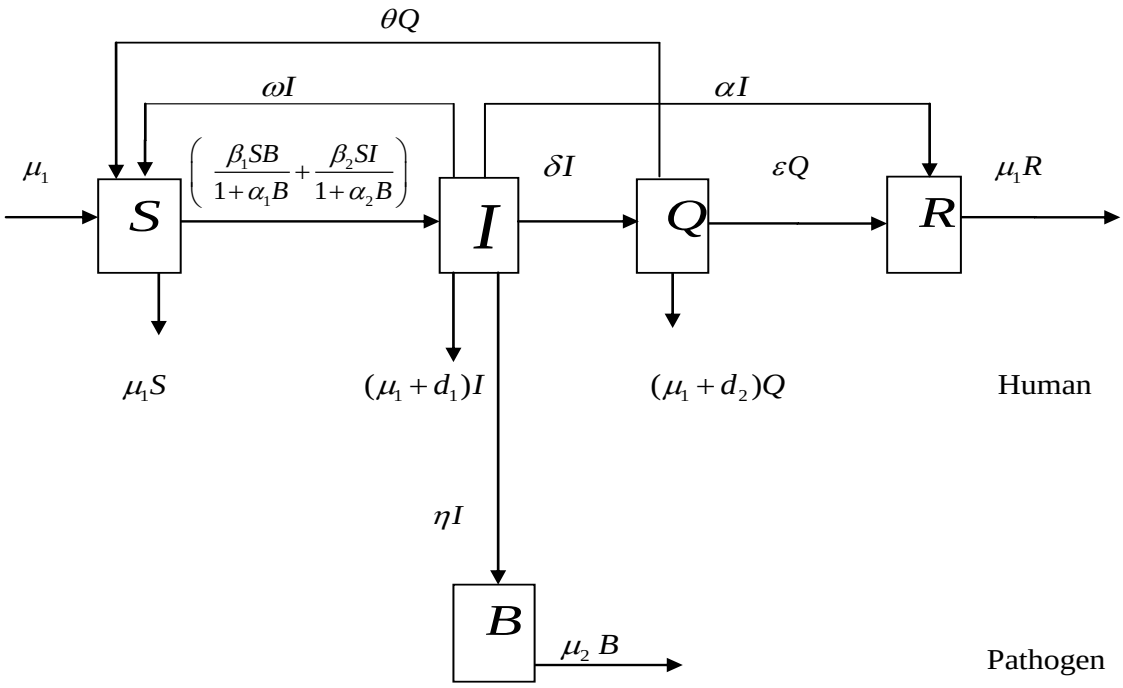

Figure 1 : Transfer diagram for SIQS cholera model

The symbols are used here stands for

$\mu_1 =$ Natural human birth and death rate,

β_1, β_2 = Contact rates for the human-environment & human-human interactions respectively ,

α_1 , α_2 = Constant rates ,

d_1 , d_2 = Disease related death rate constant in I & Q respectively,

α = Recovery rate from the disease ,

δ = Transmission rate between compartments I to Q ,

ε = Transmission rate between compartments Q to R ,

η = Rate of human contribution to the growth of the pathogen ,

μ_2 = Death rate of the pathogen in the environment,

ω = Disease transmission rate from compartment I to S .

θ = Disease transmission rate between compartments Q to S .

All parameters are assumed nonnegative .

3. Mathematical Analysis of the model

The differential equations corresponding to the transfer diagram are

$$\frac{dS}{dt} = \mu_1 + \omega I + \theta Q - \frac{\beta_1 S B}{1+\alpha_1 B} - \frac{\beta_2 S I}{1+\alpha_2 I} - \mu_1 S$$

$$\frac{dI}{dt} = \frac{\beta_1 S B}{1+\alpha_1 B} + \frac{\beta_2 S I}{1+\alpha_2 I} - (d_1 + \mu_1 + \delta + \alpha + \omega) I$$

$$\frac{dQ}{dt} = \delta I - (\varepsilon + d_2 + \mu_1 + \theta) Q \qquad (1)$$

$$\frac{dR}{dt} = \alpha I + \varepsilon Q - \mu_1 R$$

$$\frac{dB}{dt} = \eta I - \mu_2 B \qquad .$$

The system (1) can also be considered in the form of system (2)

$$\frac{dS}{dt} = \mu_1 + \omega I + \theta Q - \frac{\beta_1 S B}{1+\alpha_1 B} - \frac{\beta_2 S I}{1+\alpha_2 I} - \mu_1 S$$

$$\frac{dI}{dt} = \frac{\beta_1 S B}{1+\alpha_1 B} + \frac{\beta_2 S I}{1+\alpha_2 I} - (d_1 + \mu_1 + \delta + \alpha + \omega) I \qquad (2)$$

$$\frac{dQ}{dt} = \delta I - (\varepsilon + d_2 + \mu_1 + \theta) Q$$

$$\frac{dB}{dt} = \eta I - \mu_2 B \qquad .$$

The feasible region of human population D and pathogen Ω corresponding to the system (2) will be

$D = \{(S, I, Q) : S \geq 0, I \geq 0, Q \geq 0, S + I + Q \leq 1\}$, $\Omega = \{B : B \geq 0\}$ respectively .

4. Equilibrium points

4.1 Disease-free equilibrium (E^0)

The system (2) can be written as

$$\mu_1 + \omega I + \theta Q - \frac{\beta_1 S B}{1+\alpha_1 B} - \frac{\beta_2 S I}{1+\alpha_2 I} - \mu_1 S = 0$$

$$\frac{\beta_1 S B}{1+\alpha_1 B} + \frac{\beta_2 S I}{1+\alpha_2 I} - (d_1 + \mu_1 + \delta + \alpha + \omega) I = 0 \qquad (3)$$

$$\delta I - (\varepsilon + d_2 + \mu_1 + \theta) Q = 0$$

$$\eta I - \mu_2 B = 0$$

Assume that $I = 0$ (no disease),then $Q = 0$ and $B = 0$ and $S = 1$ .Thus, $E^0 = (1, 0, 0, 0)$.

4.2 Endemic equilibrium (E^*)

Assume that there is disease occurs ,then $I \neq 0$.

System (2) can be written as

$$\mu_1 + \omega I^* + \theta Q^* - \frac{\beta_1 S^* B^*}{1+\alpha_1 B^*} - \frac{\beta_2 S^* I^*}{1+\alpha_2 I^*} - \mu_1 S^* = 0$$

$$\frac{\beta_1 S^* B^*}{1+\alpha_1 B^*} + \frac{\beta_2 S^* I^*}{1+\alpha_2 I^*} - (d_1 + \mu_1 + \alpha + \delta + \omega) I^* = 0 \qquad (4)$$

$$\delta I^* - (d_2 + \mu_1 + \varepsilon + \theta) Q^* = 0$$

$$\eta I^* - \mu_2 B^* = 0$$

From equations third and fourth, we obtain $Q^* = \dfrac{\delta I^*}{(\varepsilon + \mu_1 + d_2 + \theta)}$, $B^* = \dfrac{\eta I^*}{\mu_2}$

respectvely . On solving first and second equations ,we get

$$S^* = \frac{1}{\mu_1}\left[\mu_1 - (d_1 + \mu_1 + \alpha + \delta) I^* + \frac{\theta \delta I^*}{(\varepsilon + \mu_1 + d_2 + \theta)}\right].$$

Again, from first equation,

$$\left\{\left[\frac{\beta_1 \eta}{\mu_2 + \alpha_1 \eta I^*} + \frac{\beta_2}{1+\alpha_2 I^*}\right] \frac{1}{\mu_1}\left[\mu_1 - (d_1 + \mu_1 + \alpha + \delta) I^* + \frac{\theta \delta I^*}{(\varepsilon + \mu_1 + d_2 + \theta)}\right] - (d_1 + \mu_1 + \alpha + \delta + \omega)\right\} I^* = 0.$$

But $I^* \neq 0$, so

$$\left\{\left[\frac{\beta_1 \eta}{\mu_2 + \alpha_1 \eta I^*} + \frac{\beta_2}{1+\alpha_2 I^*}\right] \frac{1}{\mu_1}\left[\mu_1 - (d_1 + \mu_1 + \alpha + \delta) I^* + \frac{\theta \delta I^*}{(\varepsilon + \mu_1 + d_2 + \theta)}\right] - (d_1 + \mu_1 + \alpha + \delta + \omega)\right\} = 0.$$

Or $$\frac{1}{\mu_1}\left[\mu_1 - (d_1 + \mu_1 + \alpha + \delta) I^* + \frac{\theta \delta I^*}{(\varepsilon + \mu_1 + d_2 + \theta)}\right] = \frac{(d_1 + \mu_1 + \alpha + \delta + \omega)}{\left[\dfrac{\beta_1 \eta}{\mu_2 + \alpha_1 \eta I^*} + \dfrac{\beta_2}{1+\alpha_2 I^*}\right]}.$$

Take $g_1(I^*) = g_2(I^*)$, where

$$g_1(I^*) = \frac{1}{\mu_1}\left[\mu_1 - (d_1 + \mu_1 + \alpha + \delta) I^* + \frac{\theta \delta I^*}{(\varepsilon + \mu_1 + d_2 + \theta)}\right] \text{and} \quad g_2(I^*) = \frac{(d_1 + \mu_1 + \alpha + \delta + \omega)}{\left[\dfrac{\beta_1 \eta}{\mu_2 + \alpha_1 \eta I^*} + \dfrac{\beta_2}{1+\alpha_2 I^*}\right]}.$$

Now, presume that $I = I^*$, then

$g_1(I)=\frac{1}{\mu_1}\left[\mu_1-(d_1+\mu_1+\alpha+\delta)I+\frac{\theta\delta I}{(\varepsilon+\mu_1+d_2+\theta)}\right]$ and $g_2(I)=\frac{(d_1+\mu_1+\alpha+\delta+\omega)}{\left[\frac{\beta_1\eta}{\mu_2+\alpha_1\eta I}+\frac{\beta_2}{1+\alpha_2 I}\right]}$

If $I=0$, then $g_1(0)=1$ and $g_2(0)=\frac{\mu_2(d_1+\mu_1+\alpha+\delta+\omega)}{(\beta_1\eta+\beta_2\mu_2)}$.

If $I>0$ then $g_1(I)<0$ and $g_2(I)>0$.

Then, we observe that $g_2(I)$ is rising function for $I\geq 0$.

Hence, basic reproduction number R_q is given by $R_q=\frac{(\beta_1\eta+\beta_2\mu_2)}{\mu_2(d_1+\mu_1+\alpha+\delta+\omega)}$.

If $R_q>1$, then $g_2(0)<1$.

Thus, $E^*=\left(\frac{1}{\mu_1}\left[\mu_1-(d_1+\mu_1+\alpha+\delta)I^*+\frac{\theta\delta I^*}{(\varepsilon+\mu_1+d_2+\theta)}\right],I^*,\frac{\delta I^*}{\varepsilon+\mu_1+d_2+\theta},\frac{\eta I^*}{\mu_2}\right)$,

where I^* can be find out on solving $g_1(I^*)=g_2(I^*)$.

5. Stability Analysis

Theorem 1. If $R_q<1$, then the disease-free equilibrium is locally asymptotically stable.

Proof. Consider the matrix at disease-free equilibrium as

$$J(E^0)=\begin{bmatrix}-\mu_1 & \omega-\beta_2 & \theta & -\beta_1\\ 0 & \beta_2-(d_1+\mu_1+\delta+\alpha+\omega) & 0 & \beta_1\\ 0 & \delta & -(\varepsilon+d_2+\mu_1+\theta) & 0\\ 0 & \eta & 0 & -\mu_2\end{bmatrix}.$$

Then,

$$\left|J(E^0)-zI\right|=0.$$

$$\Rightarrow\begin{vmatrix}-\mu_1-z & \omega-\beta_2 & \theta & -\beta_1\\ 0 & \beta_2-(d_1+\mu_1+\delta+\alpha+\omega+z) & 0 & \beta_1\\ 0 & \delta & -(\varepsilon+d_2+\mu_1+\theta+z) & 0\\ 0 & \eta & 0 & -\mu_2-z\end{vmatrix}=0.$$

On simplification, we have

$$(\varepsilon+d_2+\mu_1+\theta+z)(\mu_1+z)\{z^2+(\mu_2+d_1+\mu_1+\delta+\alpha+\omega-\beta_2)z$$
$$+\mu_2(d_1+\mu_1+\delta+\alpha+\omega)-(\mu_2\beta_2+\beta_1\eta)\}=0.$$

First two eigen values are $z=-\mu_1<0$ and $z=-(\varepsilon+\mu_1+d_2+\theta)<0$.

Remaining two eigen values are obtaining by the following equation

$$z^2+(\mu_2+d_1+\mu_1+\delta+\alpha+\omega-\beta_2)z+\mu_2(d_1+\mu_1+\delta+\alpha+\omega)-(\mu_2\beta_2+\beta_1\eta)=0.$$

which can be written as

$$z^2+a_1 z+a_2=0$$

where,

$$a_1=(\mu_2+d_1+\mu_1+\delta+\alpha+\omega-\beta_2),$$

$$a_2=\mu_2(d_1+\mu_1+\delta+\alpha+\omega)-(\mu_2\beta_2+\beta_1\eta)=\mu_2(d_1+\mu_1+\delta+\alpha+\omega)\left[1-\frac{\mu_2\beta_2+\beta_1\eta}{\mu_2(d_1+\mu_1+\delta+\alpha+\omega)}\right]$$

$$=1-R_q.$$

where, $R_q=\dfrac{(\beta_1\eta+\beta_2\mu_2)}{\mu_2(d_1+\mu_1+\alpha+\delta+\omega)}<1.$

Hence, $a_1>0, a_2>0$ and $a_1a_2>0$

Thus , by the Routh-Hurwitz criteria ,the theorem is proved.

Theorem 2. The disease-free equilibrium is globally asymptotically stable if $R_q<1$.

Proof . We employ method of Castillo-Chavez . System (1) can be consider into two compartments , that is , uninfected and infected individuals, given by $a_1:\dfrac{dU}{dt}=M(U,V)$ and $a_2:\dfrac{dV}{dt}=P(U,V), P(U,0)=0$,Where , $U=(S,R)\in R_+^2$, $V=(I,Q,B)\in R_+^3$.

Let $E^0=(N_0,0), N_0=(\dfrac{\pi}{\mu+\nu})$. (5)

Then $E^0=(N_0,0)$ is globally asymptotically stable equilibrium of (5) if the following conditions are satisfied :

b_1: E^0 is globally asymptotically stable for $\dfrac{dU}{dt}=M(U,0)$, $b_2:\hat{P}(U,V)\geq 0,(U,V)\in D$,

where $P(U,V)=AV-\hat{P}(U,V)$, A is a Metzier matrix.

Then we can write $A=F-V$. Now,

$$\frac{dU}{dt}=M(U,V)=\begin{bmatrix}\pi-\dfrac{B\beta_e S}{k+B}-\beta_h SI-(\mu+\nu)S+\alpha Q\\ \nu S+\eta Q-\mu R\end{bmatrix} \text{and } b_1:\frac{dU}{dt}=M(U,0)=\begin{bmatrix}\pi-(\mu+\nu)S\\ \nu S\end{bmatrix}$$

and $\frac{dV}{dt} = P(U,V) = \begin{bmatrix} \frac{B\beta_e S}{k+B} + \beta_h SI - (\mu+\delta_1+\gamma)I \\ \gamma I - (\mu+\delta_2+\eta+\alpha)Q \\ \varepsilon I - cB \end{bmatrix}, P(U,0) = 0.$

Hence, b_1 is satisfied.

Now for b_2, $A = F - V = \begin{bmatrix} \frac{\beta_h \pi}{\mu+v} - (\mu+\delta_1+\gamma) & 0 & \frac{\beta_e \pi}{\mu+v} \\ \gamma & -(\mu+\delta_2+\eta+\alpha) & 0 \\ \varepsilon & 0 & -c \end{bmatrix}$ and

$$AV = \begin{bmatrix} \frac{\beta_h \pi}{\mu+v} - (\mu+\delta_1+\gamma) & 0 & \frac{\beta_e \pi}{\mu+v} \\ \gamma & -(\mu+\delta_2+\eta+\alpha) & 0 \\ \varepsilon & 0 & -c \end{bmatrix} \begin{bmatrix} I \\ Q \\ B \end{bmatrix} = \begin{bmatrix} \frac{\beta_h \pi I}{\mu+v} - (\mu+\delta_1+\gamma)I + \frac{\beta_e \pi B}{\mu+v} \\ \gamma I - (\mu+\delta_2+\eta+\alpha)Q \\ \varepsilon I - cB \end{bmatrix}$$

Thus, $\hat{P}(U,V) = AV - P(U,V) = \begin{bmatrix} 0 \\ 0 \\ 0 \end{bmatrix} = \begin{bmatrix} \hat{P}(U,V)_1 \\ \hat{P}(U,V)_2 \\ \hat{P}(U,V)_3 \end{bmatrix}$.Hence, b_2 is satisfied.

This completes the proof.

Theorem 3. If $R_q > 1$, then the endemic equilibrium is locally asymptotically stable.

Proof. The variational matrix will be

$$J(E^*) = \begin{bmatrix} \frac{-\beta_1 B^*}{1+\alpha_1 B^*} - \frac{\beta_2 I^*}{1+\alpha_2 I^*} - \mu_1 & \omega - \frac{\beta_2 S^*}{(1+\alpha_2 I^*)^2} & \theta & \frac{-\beta_1 S^*}{(1+\alpha_1 B^*)^2} \\ \frac{\beta_1 B^*}{1+\alpha_1 B^*} + \frac{\beta_2 I^*}{1+\alpha_2 I^*} & \frac{\beta_2 S^*}{(1+\alpha_2 I^*)^2} - (d_1+\mu_1+\delta+\alpha+\omega) & 0 & \frac{\beta_1 S^*}{(1+\alpha_1 B^*)^2} \\ 0 & \delta & -(\varepsilon+d_2+\mu_1+\theta) & 0 \\ 0 & \eta & 0 & -\mu_2 \end{bmatrix}.$$

Or $$J(E^*) = \begin{bmatrix} -J_1 - \mu_1 & \omega - J_2 & \theta & -J_3 \\ J_1 & K & 0 & J_3 \\ 0 & \delta & -L & 0 \\ 0 & \eta & 0 & -\mu_2 \end{bmatrix}$$

where,

$$J_1 = \frac{\beta_1 B^*}{1+\alpha_1 B^*} + \frac{\beta_2 I^*}{1+\alpha_2 I^*}, \quad J_2 = \frac{\beta_2 S^*}{(1+\alpha_2 I^*)^2}, \quad J_3 = \frac{\beta_1 S^*}{(1+\alpha_1 B^*)^2},$$

$K = J_2 - (d_1 + \mu_1 + \alpha + \delta + \omega)$ and $L = (\varepsilon + \mu_1 + d_2 + \theta)$.

Then,

$$\left| J(E^*) - \lambda I \right| = 0.$$

$$\Rightarrow J(E^*) = \begin{vmatrix} -J_1 - \mu_1 - \lambda & \omega - J_2 & \theta & -J_3 \\ J_1 & K - \lambda & 0 & J_3 \\ 0 & \delta & -(L+\lambda) & 0 \\ 0 & \eta & 0 & -\mu_2 - \lambda \end{vmatrix} = 0.$$

On simplification,

$$\begin{aligned}
&\lambda^4 + \lambda^3(-K + L + \mu_2 + J_1 + \mu_1) + \lambda^2(-K\mu_2 - KL - K(J_1+\mu_1) + (J_1+\mu_1)\mu_2 + \mu_2 L + (J_1+\mu_1)L - J_3\eta + J_1\omega - J_1J_2) \\
&+\lambda((J_1+\mu_1)\{-K(\mu_2+L) + \mu_2 L - J_3\eta\} - K\mu_2 L - J_3\eta L + J_1\{\omega(\mu_2+L) - J_2(\mu_2+L) - J_3\eta + \theta\delta\}) \\
&+(J_1\omega\mu_2 L + J_1\theta\delta\mu_2 - J_1J_2\mu_2 L - J_1J_3\eta L - (J_1+\mu_1)LK\mu_2 - (J_1+\mu_1)J_3\eta L) = 0.
\end{aligned}$$

or

$$\lambda^4 + a_1\lambda^3 + a_2\lambda^2 + a_3\lambda + a_4 = 0$$

where

$$\begin{aligned}
a_1 &= (-K + L + \mu_2 + J_1 + \mu_1) = 3\mu_1 + (d_1 + \delta + \alpha + \omega + \varepsilon + d_2 + \theta) + \mu_2 + J_1 - J_2 > 0 \\
a_2 &= (-K\mu_2 - KL - K(J_1+\mu_1) + (J_1+\mu_1)\mu_2 + \mu_2 L + (J_1+\mu_1)L - J_3\eta + J_1\omega - J_1J_2) \\
&= (J_1+\mu_1)(2\mu_1 + d_1 + \delta + \alpha + \omega + \varepsilon + d_2 + \theta + \mu_2 - J_2) - (J_2 - (\mu_1 + d_1 + \delta + \alpha + \omega))(\varepsilon + d_2 + \theta + \mu_2 + \mu_1) \\
&\quad + \mu_2(\varepsilon + d_2 + \theta + \mu_1) - J_3\eta + J_1\omega - J_1J_2 > 0 \\
a_3 &= ((J_1+\mu_1)\{-K(\mu_2+L) + \mu_2 L - J_3\eta\} - K\mu_2 L - J_3\eta L + J_1\{\omega(\mu_2+L) - J_2(\mu_2+L) - J_3\eta + \theta\delta\}) \\
&= (J_1+\mu_1)\{-(J_2 - (\mu_1 + d_1 + \delta + \alpha + \omega))(\varepsilon + d_2 + \theta + \mu_2 + \mu_1) + \mu_2(\varepsilon + d_2 + \theta + \mu_1) - J_3\eta\} \\
&\quad - \mu_2(J_2 - (\mu_1 + d_1 + \delta + \alpha + \omega))(\varepsilon + d_2 + \theta + \mu_1) - J_3\eta(\varepsilon + d_2 + \theta + \mu_1) + J_1\{\omega(\mu_2 + \varepsilon + d_2 + \theta + \mu_1) \\
&\quad - J_2(\mu_2 + \varepsilon + d_2 + \theta + \mu_1)J_3\eta + \theta\delta\} > 0 \\
a_4 &= (J_1\omega\mu_2 L + J_1\theta\delta\mu_2 - J_1J_2\mu_2 L - J_1J_3\eta L - (J_1+\mu_1)LK\mu_2 - (J_1+\mu_1)J_3\eta L) \\
&= J_1\omega\mu_2(\varepsilon + d_2 + \theta + \mu_1) + J_1\theta\delta\mu_2 - J_1J_2\mu_2(\varepsilon + d_2 + \theta + \mu_1) - J_1J_3\eta(\varepsilon + d_2 + \theta + \mu_1) \\
&\quad - (J_1+\mu_1)\mu_2(\varepsilon + d_2 + \theta + \mu_1)(J_2 - (\mu_1 + d_1 + \delta + \alpha + \omega)) - (J_1+\mu_1)J_3\eta(\varepsilon + d_2 + \theta + \mu_1) > 0
\end{aligned}$$

It is clearly seen that $a_1 > 0$, $a_2 > 0$ $a_3 > 0$, $a_4 > 0$ *and* $a_1 a_2 a_3 > a_3^2 + a_1^2 a_4$. Hence, by Routh-Hurwitz criteria, the theorem is proved.

Theorem 4. The endemic equilibrium is globally asymptotically stable if $R_q > 1$.

Proof . Assume

$$F_1 = \pi - \frac{B\beta_e S}{k+B} - \beta_h SI - (\mu+\nu)S + \alpha Q$$

$$F_2 = \frac{B\beta_e S}{k+B} + \beta_h SI - (\mu+\delta_1+\gamma)I$$

$$F_3 = \gamma I - (\mu+\delta_2+\eta+\alpha)Q$$

$$F_4 = \nu S + \eta Q - \mu R$$

$$F_5 = \varepsilon I - cB$$

We use Dulac plus Poincare Bendixson theorem as follows

Consider , $H(S,I,Q,R,B) = \frac{1}{SIQRB}$ where $S>0, I>0, Q>0, R>0, B>0$.

Then , $\nabla(HF) = \frac{\partial}{\partial S}(H.F_1) + \frac{\partial}{\partial I}(H.F_2) + \frac{\partial}{\partial Q}(H.F_3) + \frac{\partial}{\partial R}(H.F_4) + \frac{\partial}{\partial B}(H.F_5)$

$$\Rightarrow \nabla(HF) = \frac{-\pi}{S^2IQRB} - \frac{\alpha}{S^2IRB} - \frac{\beta_e}{I^2QR(k+B)} - \frac{\gamma}{SQ^2RB} - \frac{\nu}{IQR^2B} - \frac{\eta}{SIR^2B} - \frac{\varepsilon}{SQRB^2} < 0 .$$

Hence,by Dulac's criterian , The proof is completed.

6. Numerical Simulation and graphical representation

Case I : Disease dies out at R_q <1

$S(0) = 80000, I(0) = 60000, Q(0) = 40000, R(0) = 20000, B(0) = 200000,$
$\mu_1 = 9.13\times10^{-5} / day, \beta_1 = 0.00025 / day, \alpha_1 = 5\, days, \beta_2 = 0.00015 / day,$
$\alpha_2 = 10\, days, d_1 = 0.015 / day, \alpha = 0.2 / day, \delta = 0.005 / day, \varepsilon = 0.2 / day,$
$d_2 = 0.0001 / day, \eta = 10 cells / litre / day / person, \mu_2 = 0.33 / day, \omega = 0.2 / day,$
$\theta = 0.4, R_q = 0.018 < 1.$

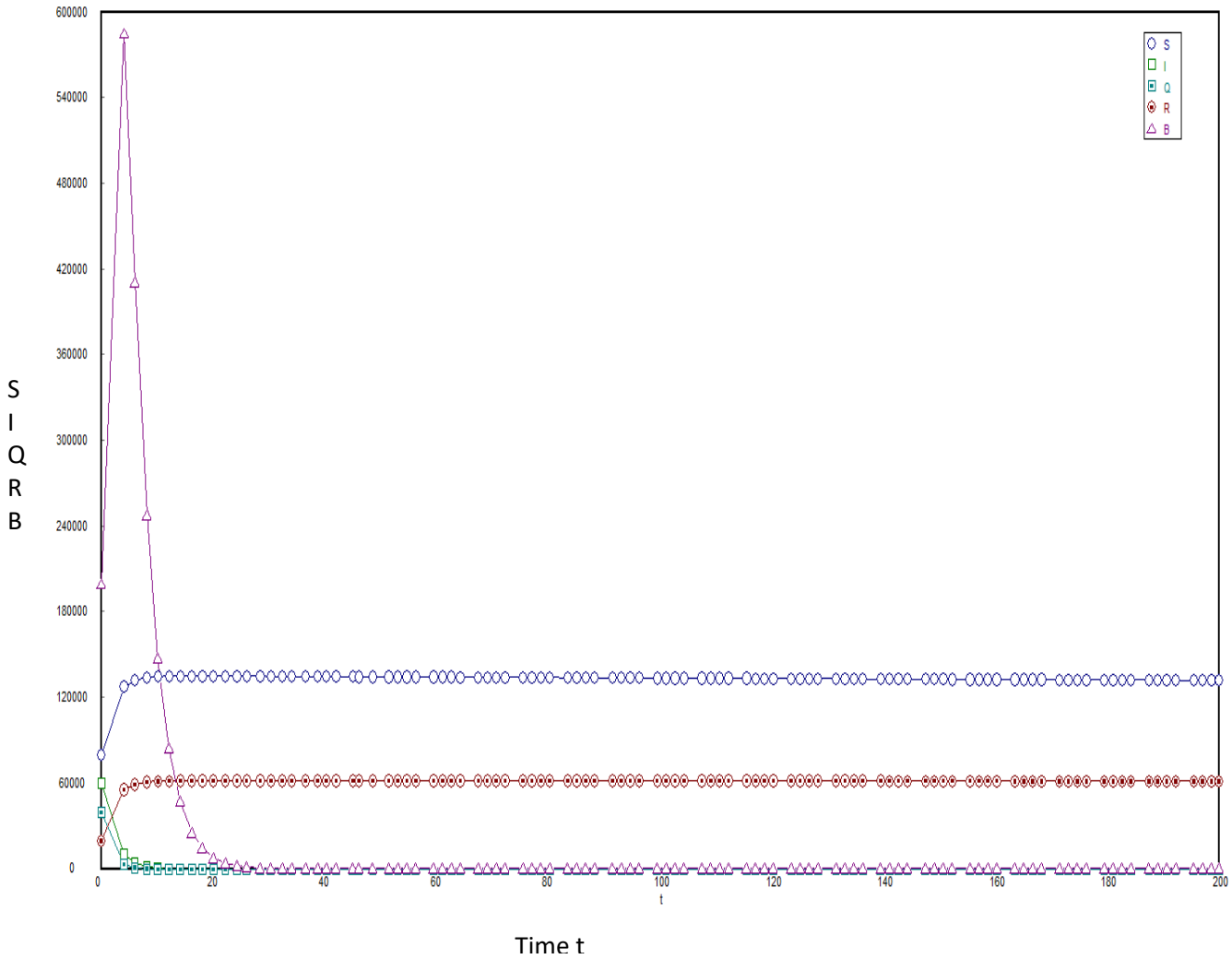

Figure 2 SIQS cholera transmission model when $R_q < 1$.

Case II : Disease persists at $R_q > 1$

$$S(0) = 80000, I(0) = 20000, Q(0) = 40000, R(0) = 50000, B(0) = 200000,$$
$$\mu_1 = 9.13\times10^{-5} / day, \beta_1 = 0.25 / day, \alpha_1 = 5\, days, \beta_2 = 0.0015 / day,$$
$$\alpha_2 = 10\, days, d_1 = 0.002 / day, \alpha = 0.00002 / day, \delta = 0.5 / day, \varepsilon = 0.2 / day,$$
$$d_2 = 0.0001 / day, \eta = 10\, cells / litre / day / person, \mu_2 = 0.33 / day, \omega = 0.9 / day,$$
$$\theta = 0.8, R_q = 5.404 > 1.$$

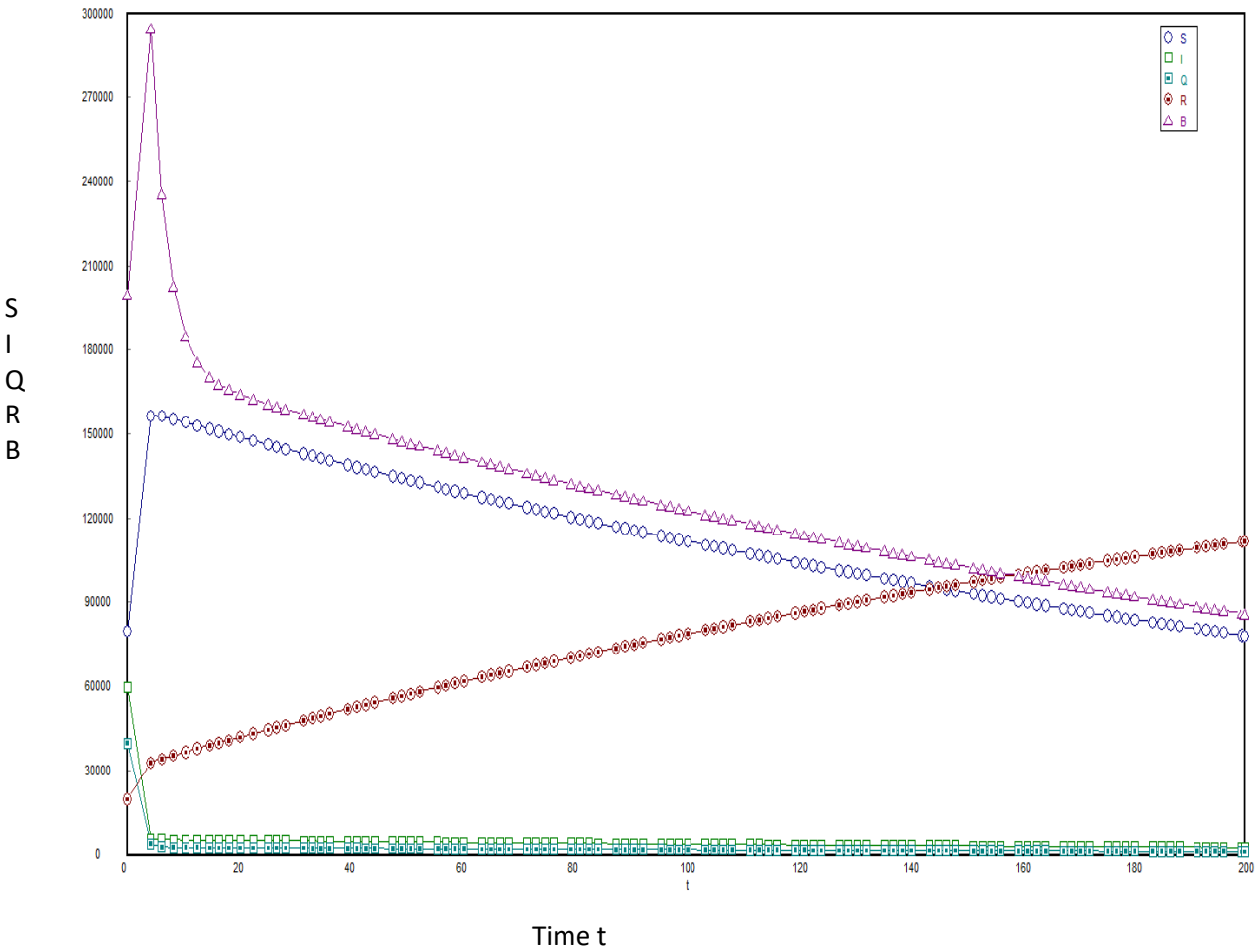

Figure 3 SIQS cholera transmission model when $R_q > 1$

7. Conclusion

In this paper, we have discussed asymptotic behavior for an SIQS cholera epidemic model mathematically and numerically .We have obtained disease-free and endemic equilibria for the model and analyzed the stability criteria for the both equilibria. Mathematically,we have concluded that if basic reproduction number $R_q < 1$,then the disease-free equilibrium is local and global asymptotic stable using Routh-Hurwitz criteria and Castillo-Chavez criteria respectively . If basic reproduction number $R_q > 1$,then the endemic equilibrium is local and

global asymptotic stable using Routh-Hurwitz criteria and Dulac's plus Poincare criteria respectively .Numerically calculations have been done . Plot graphs of *SIQRB* vs time *t* which give more clearity when the disease dies out and when the disease persists .

References

[1]. Adebimpe O.,Erinle-Ibrahim L.M.,Adebisi A.F.,Stability Analysis of SIQS Epidemic Model with Saturated Incidence Rate,Applied Mathematics Scientific Research Publishing,7,1082-1086,2016.

[2].Castollo-Chavez,Feng Z,Hung W, Computation of basic reproductive number and its role on global stability,125,229-250,2002.

[3] Mokati D.,Badshah V.H.,Gupta Nirmala,*A Mathematical Model for SIS Cholera Epidemic With Quarantine Effect*, American Journal of Applied Mathematics,7(5),145-151,2019.

[4] Nirwani N., Badshah V. H. and Khandelwal. R, *SIQR Model for Transmission of Cholera*, Advances in Applied Science Research, Pelagia research library,6(6), 181-186, 2015.

[5] Pang Y., Han Y. and Li W, *The Threshold of a Stochastic SIQS EpidemicModel*, Advances in Difference Equations, 1 ,issue 320, 1-15, 2014.